FIG 1

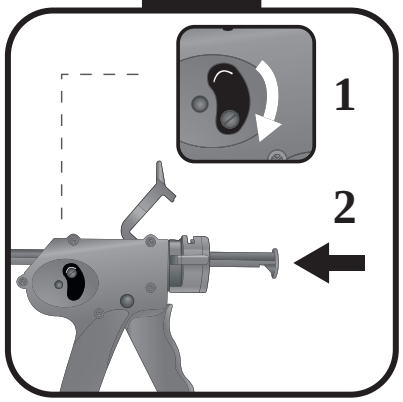

FIG 2

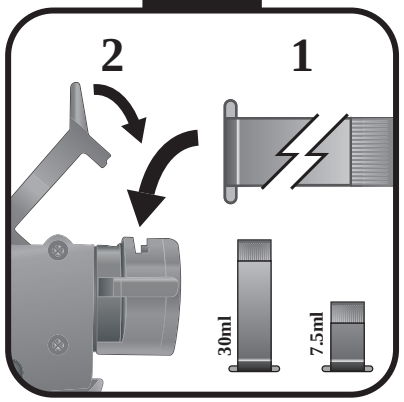

FIG 3

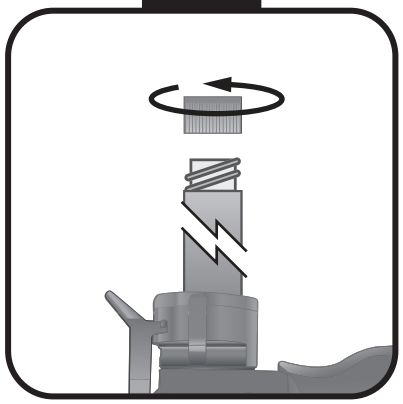

FIG 4

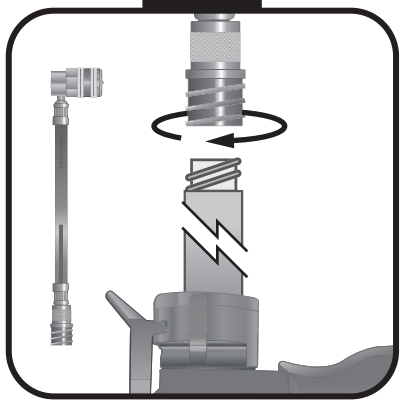

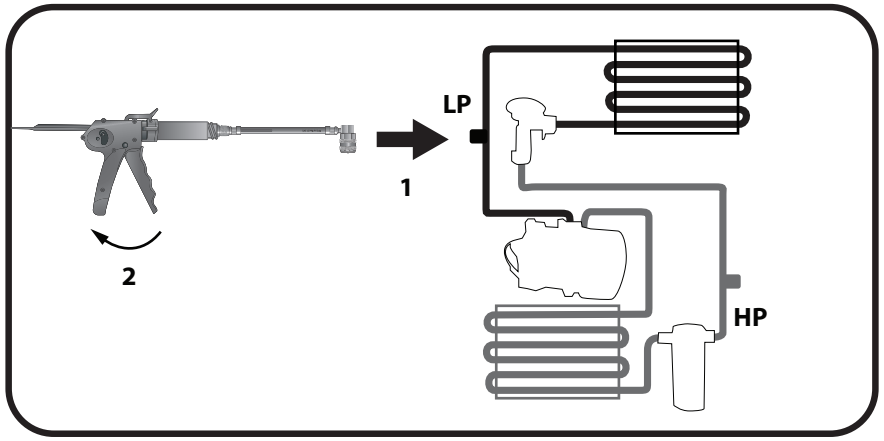

AC-413000, AC-399020EU, AC-399006EU,
AC-98000057, AC-471546, AC-120027
www.uview.com

FIG 1

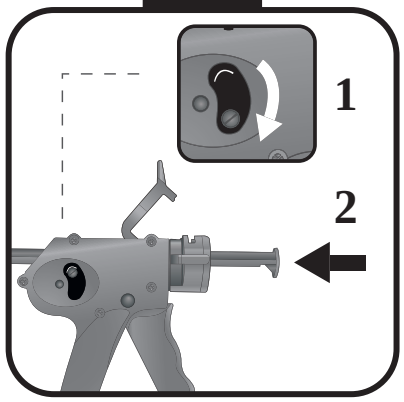

FIG 2

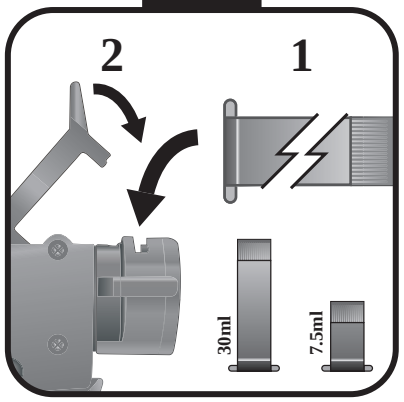

FIG 3

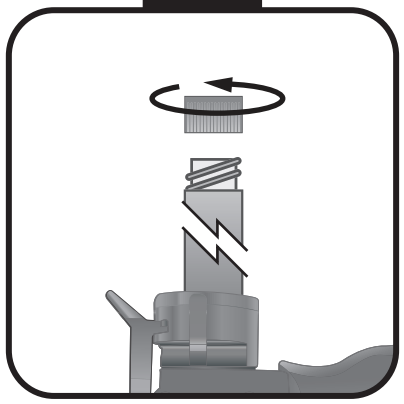
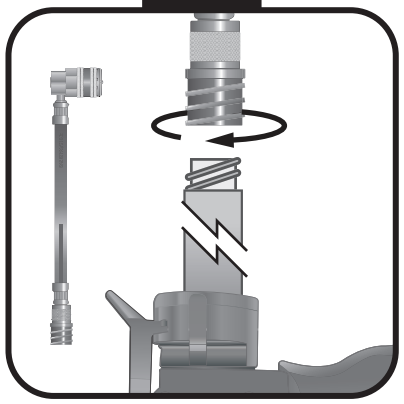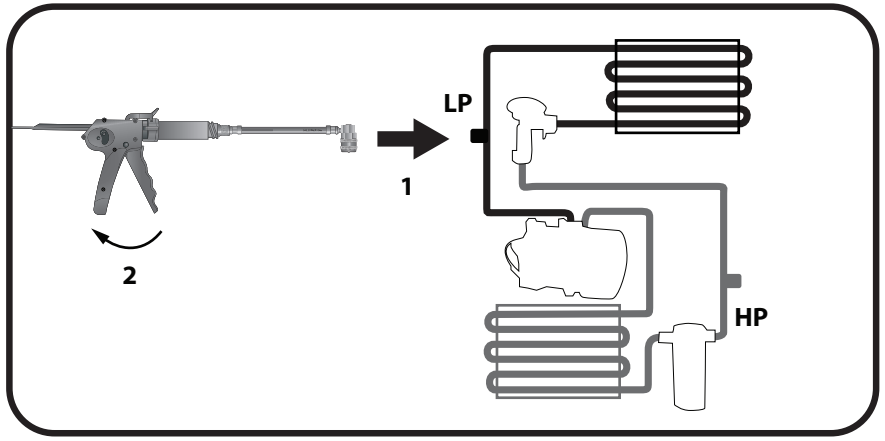
FIG 4